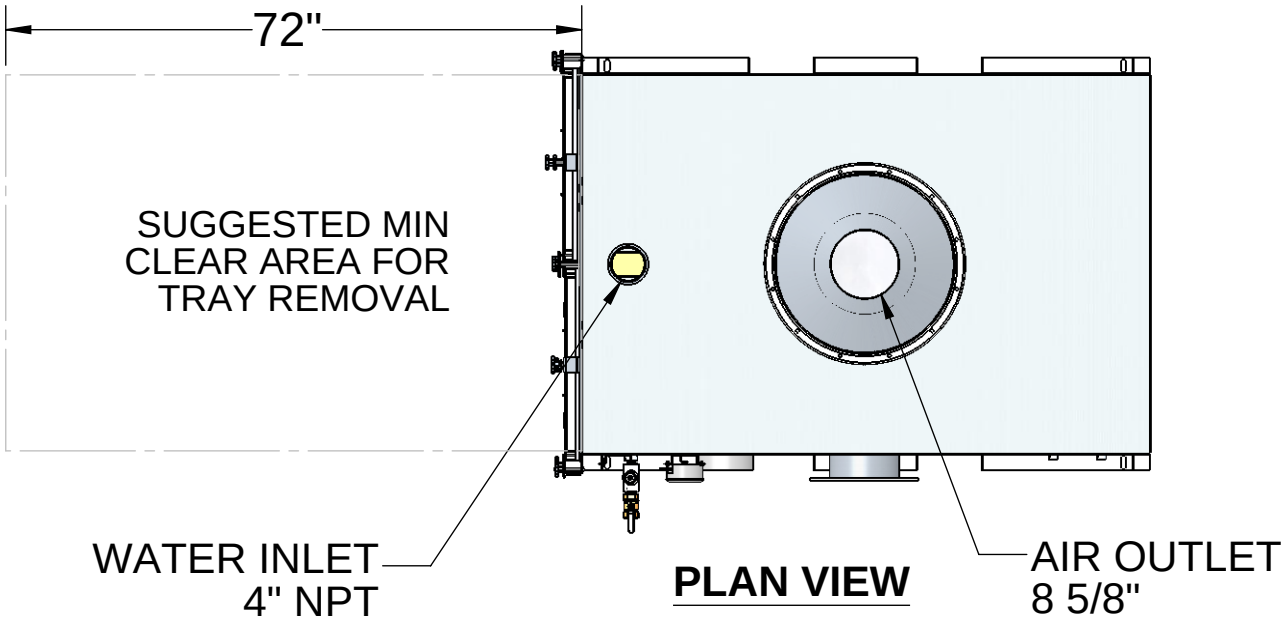


**PLAN VIEW**

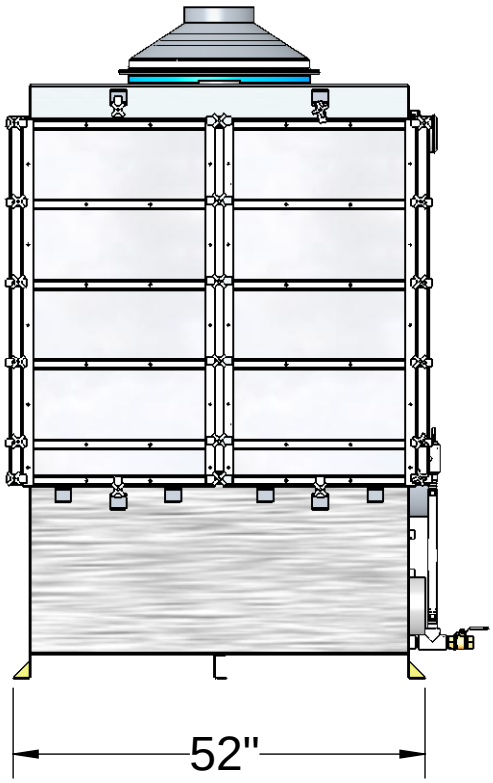


**FRONT VIEW**

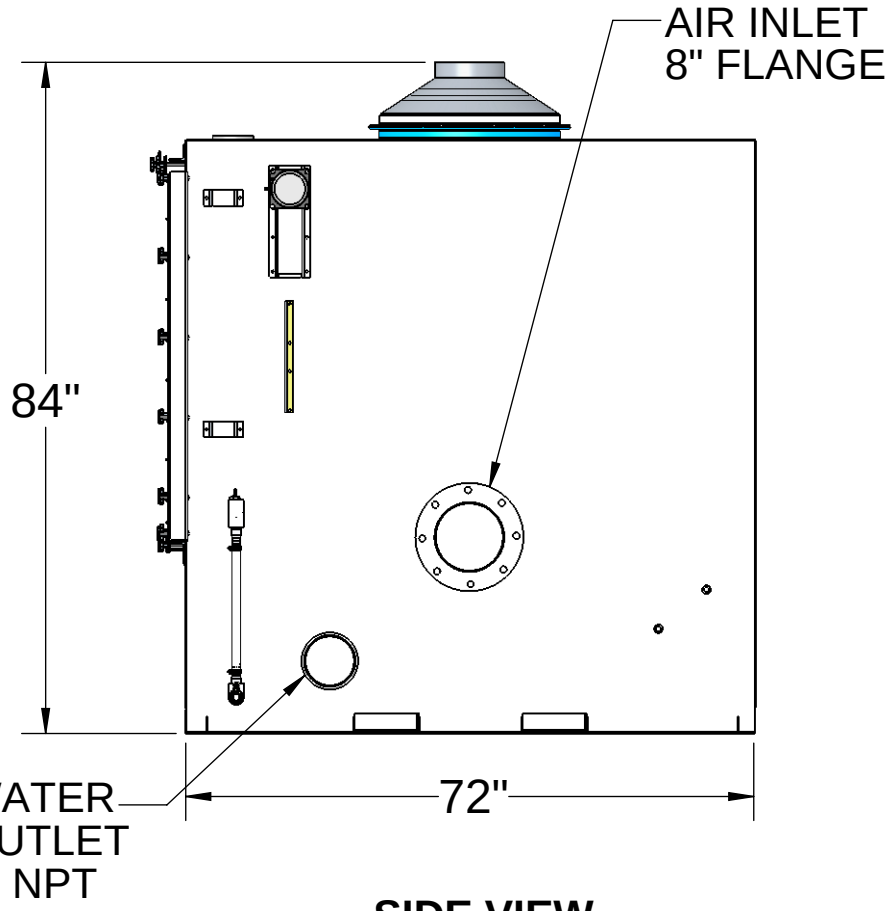


**SIDE VIEW**

# EZ-24.4SS (AIR STRIPPER ONLY)

FOR MORE SPECIFICATIONS CLICK ON:

http://www.qedenv.com/Products/Airstrippers_VOC_Removal/Air_Stripper_Specifications/

NOT TO SCALE

*NOT FOR CONSTRUCTION, FOR REFERENCE ONLY*

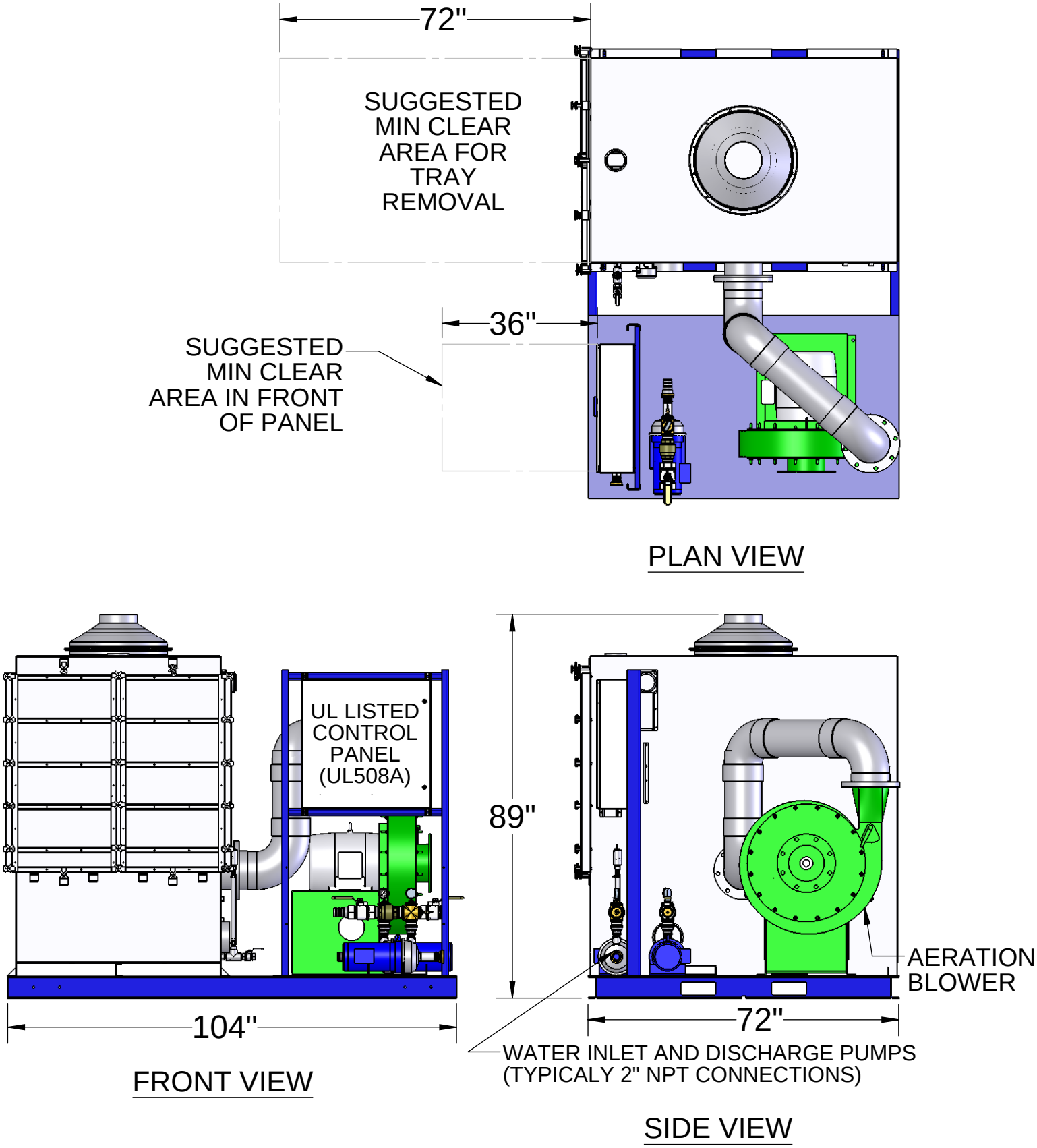


# EZ-24.4SS

EXAMPLE OF A SKID SYSTEM WITH CONTROL PANEL, PUMPS, AND BLOWER
CONTACT QED FOR INFORMATION ON ALL OPTIONS.
NOT TO SCALE

*NOT FOR CONSTRUCTION, FOR REFERENCE ONLY*